011

DART AEROSPACE

Dart Aerospace Ltd.
1270 Aberdeen St
Hawkesbury, ON
K6A 1K7
Canada

Tel (613) 632-5200
Fax 613 632-5246

D350-
Job Sheet

Part No: D350-636-022 **Job Qty:** 1 pcs
Part Name: AS350/355 - Skidtubes - Standard w/ Standard Wearplates - RH

Part Weight: 0 lbs **Status:** New **Priority:** Medium
Job Created: 6/11/19 **Job Tracking No:**
Due Date: 7/19/19 **Created By:** Marie Lajeunesse
Type: Stock **Description:** SIOP
Note: D2750-052 REV.H, IIN-D350-636 REV.K IPP REV.A 18.11.27 NEW ISSUE DD VERF:JFS
Ship Via:

Bill of Materials

Job Routing

Op No	Operation	Qty	Start Date	Due Date	Standard Setup Hrs	Standard Run Hrs	Workcenter/Supplier: Workcenter / Supplier	Lead Time	Sign-off
90	Skidtubes - 1	1 pcs		7/19/19	0.00	0.00	Skidtubes - 1		
							Skidtubes - 2		
							Skidtubes - 3		
							Skidtubes - 4		
							Skidtubes - 5		BE
							Skidtubes - 6		
							Skidtubes - 7		
110	Skidtubes - 2 - B4B	1 pcs		7/19/19	0.00	4.36	Skidtubes - 1 - B4B		
							Skidtubes - 2 - B4B		
							Skidtubes - 3 - B4B		
							Skidtubes - 4 - B4B		
							Skidtubes - 5 - B4B		BE
							Skidtubes - 6 - B4B		
							Skidtubes - 7 - B4B		
120	QC 10	1 pcs		7/19/19	0.00	0.00	QC 10 - 10		
							QC 10 - 18		
							QC 10 - 24	DAS 24 9-89	JUN 2 5 2019
							QC 10 - 43		
							QC 10 - 50		
							QC 10 - 58		
							QC 10 - 9		
130	QC 5	1 pcs		7/19/19	0.00	0.00	QC 5 - 10		
							QC 5 - 12		
							QC 5 - 17		
							QC 5 - 18		
							QC 5 - 19	DAS 24 9-89	JUN 2 5 2019
							QC 5 - 22		
							QC 5 - 24		
							QC 5 - 3		
							QC 5 - 43		
							QC 5 - 49		

					QC 5 - 51	
					QC 5 - 58	
					QC 5 - 68	
					QC 5 - 9	
					QC 5 - 50	
					QC 5 - 30	
					QC 5 - 40	
140	**Handfinish - 1-1 Chemical-B4B**	1 pcs	7/19/19	0.00 0.91	Handfinish - 1 - 1 - B4B	
					Handfinish - 1 - 2 - B4B	
					Handfinish - 1 - 3 - B4B	JUN 2 6 2019
					Handfinish - 1 - 4 - B4B	
					Handfinish - 1 - 5 - B4B	
					Handfinish - 1 - 6 - B4B	
					Handfinish - 1 - 7 - B4B	
					Handfinish - 1 - 8 - B4B	
					Handfinish - 1 - 9 - B4B	
					Handfinish - 1 - 10 - B4B	
					Handfinish - 1 - 11 - B4B	
					Handfinish - 1 - 12 - B4B	
					Handfinish - 1 - 13 - B4B	
					Handfinish - 1 - 14 - B4B	
					Handfinish - 1 - 15 - B4B	
					Handfinish - 1 - 16 - B4B	
					Handfinish - 1 - 17 - B4B	
					Handfinish - 1 - 18 - B4B	
					Handfinish - 1 - 19 - B4B	
					Handfinish - 1 - 20 - B4B	
					Handfinish - 1 - 21 - B4B	
					Handfinish - 1 - 22 - B4B	
150	**QC 7**	1 pcs	7/19/19	0.00 0.00	QC 7 - 10	
					QC 7 - 13	
					QC 7 - 14	
					QC 7 - 15	
					QC 7 - 17	
					QC 7 - 18	BE
					QC 7 - 19	
					QC 7 - 2	
					QC 7 - 28	
					QC 7 - 3	
					QC 7 - 30	
					QC 7 - 34	
					QC 7 - 36	
					QC 7 - 37	
					QC 7 - 41	
					QC 7 - 47	
					QC 7 - 48	
					QC 7 - 51	
					QC 7 - 58	

					QC 7 - 59	
					QC 7 - 60	
					QC 7 - 9	
					QC 7 - 68	
					QC 7 - 50	
					QC 7 - 67	
					QC 7 - 40	
					QC 7 - 24	
					QC 7 - 43	
160	Skidtubes - 3 - B4B	1 pcs	7/19/19	0.00 4.36	Skidtubes - 1 - B4B	
					Skidtubes - 2 - B4B	
					Skidtubes - 3 - B4B	
					Skidtubes - 4 - B4B	
					Skidtubes - 5 - B4B	BR
					Skidtubes - 6 - B4B	
					Skidtubes - 7 - B4B	
170	QC 10	1 pcs	7/19/19	0.00 0.00	QC 10 - 10	
					QC 10 - 18	
					QC 10 - 24	JUL 1 6 2019
					QC 10 - 43	
					QC 10 - 50	
					QC 10 - 58	
					QC 10 - 9	
180	QC 5	1 pcs	7/19/19	0.00 0.00	QC 5 - 10	
					QC 5 - 12	
					QC 5 - 17	
					QC 5 - 18	
					QC 5 - 19	
					QC 5 - 22	
					QC 5 - 24	
					QC 5 - 3	
					QC 5 - 43	
					QC 5 - 49	
					QC 5 - 51	
					QC 5 - 58	
					QC 5 - 68	
					QC 5 - 9	
					QC 5 - 50	
					QC 5 - 30	
					QC 5 - 40	JUL 1 6 2019
190	Handfinish - 2-1 Pressure-B4B	1 pcs	7/19/19	0.00 0.91	Handfinish - 2 - 1 - B4B	
					Handfinish - 2 - 2 - B4B	
					Handfinish - 2 - 3 - B4B	JUL 1 7 2019
					Handfinish - 2 - 4 - B4B	
200	Spray Paint - 2 - B4B	1 pcs	7/19/19	0.00 0.69	Spray Paint - 1 - B4B	RD 19-7-17
					Spray Paint - 2 - B4B	
					Spray Paint - 3 - B4B	
					Spray Paint - 4 - B4B	
202	QC 14	1 pcs	7/19/19	0.00 0.00	QC 14 - 15	14-7-19
					QC 14 - 2	
					QC 14 - 34	
					QC 14 - 41	
					QC 14 - 51	
					QC 14 - 58	
					QC 14 - 59	
					QC 14 - 9	
					QC 14 - 68	
					QC 14 - 40	
					QC 14 - 19	

DAS 24 9-89

DAS 40 9-89

DAS 15 9-89

					QC 14 - 43	
					QC 14 - 24	
230	Handfinish - 4-1-Assembly-B4B	1 pcs	7/19/19	0.00 1.33	Handfinish - 4 - 1 - B4B	ML 14-8-19
					Handfinish - 4 - 10 - B4B	
					Handfinish - 4 - 11 - B4B	
					Handfinish - 4 - 12 - B4B	
					Handfinish - 4 - 13 - B4B	
					Handfinish - 4 - 14 - B4B	
					Handfinish - 4 - 15 - B4B	
					Handfinish - 4 - 2 - B4B	
					Handfinish - 4 - 3 - B4B	
					Handfinish - 4 - 4 - B4B	
					Handfinish - 4 - 5 - B4B	
					Handfinish - 4 - 6 - B4B	
					Handfinish - 4 - 7 - B4B	
					Handfinish - 4 - 8 - B4B	
					Handfinish - 4 - 9 - B4B	
240	QC 5	1 pcs	7/19/19	0.00 0.00	QC 5 - 10	
					QC 5 - 12	
					QC 5 - 17	
					QC 5 - 18	
					QC 5 - 19	
					QC 5 - 22	
					QC 5 - 24	
					QC 5 - 3	
					QC 5 - 43	AUG 20 2019
					QC 5 - 49 DAS	
					QC 5 - 51 81	
					QC 5 - 58 9-89	
					QC 5 - 68	
					QC 5 - 9	
					QC 5 - 50	
					QC 5 - 30	
					QC 5 - 40	
250	Packaging 1-1 - Pick Kit - B4B	1 pcs	7/19/19	0.00 0.00	Packaging 1 - 1 - B4B	
					Packaging 1 - 2 - B4B	
					Packaging 1 - 3 - B4B	
					Packaging 1 - 4 - B4B	
					Packaging 1 - 5 - B4B	
					Packaging 1 - 6 - B4B	
					Packaging 1 - 7 - B4B	
					Packaging 1 - 8 - B4B	
					Packaging 1 - 9 - B4B	
					Packaging 1 - 10 - B4B	
					Packaging 1 - 11 - B4B	
					Packaging 1 - 12 - B4B	
					Packaging 1 - 13 - B4B	
					Packaging 1 - 14 - B4B	
					Packaging 1 - 15 - B4B	
					Packaging 1 - 16 - B4B	
					Packaging 1 - 17 - B4B	
					Packaging 1 - 18 - B4B	
					Packaging 1 - 19 - B4B	
					Packaging 1 - 20 - B4B	

				Packaging 1 - 21 - B4B	
				Packaging 1 - 22 - B4B	
				Packaging 1 - 23 - B4B	
				Packaging 1 - 24 - B4B	
				Packaging 1 - 25 - B4B	
				Packaging 1 - 26 - B4B	
				Packaging 1 - 27 - B4B	
				Packaging 1 - 28 - B4B	
				Packaging 1 - 29 - B4B	
				Packaging 1 - 30 - B4B	
				Packaging 1 - 31 - B4B	
				Packaging 1 - 32 - B4B	
				Packaging 1 - 33 - B4B	
				Packaging 1 - 34 - B4B	
				Packaging 1 - 35 - B4B	
				Packaging 1 - 36 - B4B	
260 **QC 4**	1 pcs	7/19/19	0.00 0.00	QC 4 - 28	
				QC 4 - 58	SMB 19/8/24
				QC 4 - 69	
				QC 4 - 9	
				QC 4 - 46	
				QC 4 - 68	
				QC 4 - 72	
				QC 4 - 74	
270 **Packaging 3-1 - Stock - B4B**	1 pcs	7/19/19	0.00 0.00	Packaging 3 - 1 - B4B	
				Packaging 3 - 2 - B4B	
				Packaging 3 - 3 - B4B	
				Packaging 3 - 4 - B4B	NC.
				Packaging 3 - 5 - B4B	
				Packaging 3 - 6 - B4B	
				Packaging 3 - 7 - B4B	SMB 19/8/24
				Packaging 3 - 8 - B4B	
				Packaging 3 - 9 - B4B	
				Packaging 3 - 10 - B4B	
				Packaging 3 - 11 - B4B	
				Packaging 3 - 12 - B4B	
				Packaging 3 - 13 - B4B	
				Packaging 3 - 14 - B4B	
				Packaging 3 - 15 - B4B	
				Packaging 3 - 16 - B4B	
				Packaging 3 - 17 - B4B	
				Packaging 3 - 18 - B4B	
				Packaging 3 - 19 - B4B	
				Packaging 3 - 20 - B4B	
				Packaging 3 - 21 - B4B	
				Packaging 3 - 22 - B4B	
				Packaging 3 - 23 - B4B	
				Packaging 3 - 24 - B4B	
				Packaging 3 - 25 - B4B	
				Packaging 3 - 26 - B4B	
				Packaging 3 - 27 - B4B	
				Packaging 3 - 28 - B4B	
				Packaging 3 - 29 - B4B	
				Packaging 3 - 30 - B4B	
				Packaging 3 - 31 - B4B	
				Packaging 3 - 32 - B4B	
				Packaging 3 - 33 - B4B	
				Packaging 3 - 34 - B4B	
				Packaging 3 - 35 - B4B	

					Packaging 3 - 36 - B4B	AUG 2 6 2019
275	DC - 1 - B4B	1 pcs	7/19/19	0.00 0.00	DC - 1 - B4B	
					DC - 2 - B4B	
280	QC 21 - FG	1 pcs	7/19/19	0.00 0.00	QC 21 - FG - 21	
					QC 21 - FG - 70	AUG 2 6 2019
					QC 21 - FG - 53	

DAS 77 9-89

DAS 70 9-89

DAS 77 9-89

Part Op Descriptions:

90 - ISSUE S/N No labor cost associated with this operation

110 - 1- Pick D2600-3 Bent Drill pilot holes as per Dwg D2750 (D2750-6 details).Drill using drill Jig DT8150. 4- Locate DT8329 off of blade fitting bolt holes and drill pilot holes for blade fitting. Open to 0.500" using hole saw. VERIFY AND RECORD FWD BEND ANGLE. 6- Drill pilot holes for wearplates as per Dwg D2750 using DT8108 open to 0.297". 7- Open up holes of Detail BM to 0.297" (total of 2 holes per side) and one 0.201" each side as per dwg 8- Weld D2744 Cap as per Dwg D2750 and QSI 004.Fill grooves in bend left from bending as per QSI 004 9- Grind welds flush as per Dwg D2750

120 - (QC10- Inspect visual per QSI004- ground welds)

130 - (QC5- Inspect part completeness to step on W/O)

140 - (Chemical Conversion Coat per QSI005 4.1)

150 - (QC7-Inspect Chemical Conversion Coat)

160 - 1- Open up holes of Detail BN using hole saw and ground handling to 0.625" (total of 8 holes per side) as per dwg D2750. 4- Chamfer holes of Detail BN, ground handling and float holes per dwg D2750 (welding instructions on sheet 16) 5- Deburr and blow out all chips from inside of tube 6- Prepare tube for welding, remove alodine as required. 7- Bond web D2739 in place as per QSI 015, let cure for 12hrs. A/R Sikaflex-291 batch: 5116343 7 exp. date: 12-09-2019 **ATTN: USE I-BEAM LOCATION AID (BLADE FITTING)*** 8- Weld spacers D2743 as per dwg D2750 & QSI004 (welding instructions on sheet 9) A/R Aluminum Rod batch: 139011 10-Grind welds flush as per Dwg D2750 11- Spot face ground handling holes section (total of 4 places per side) as per dwg D2750 12- Deburr holes, ensure tube is free of all scratches before sending to paint.

170 - (QC10- Inspect visual per QSI004- ground welds)

180 - (QC5- Inspect part completeness to step on W/O) ***VERIFY C'BOARD IS GOOD***

190 - (Pressure Wash per QSI005 4.3/ Clean and remove all markings) Re-alodine tube as per QSI 005 section 4.1.2.1 do not acid etch.

200 - 1- PRIME AS PER DWG AND QSI 005 4.2 PRIMER PRC DESOTO 515X349 BATCH: 5 189559 2- PAINT WHITE AS PER DWG AND QSI 005 4.2 PAINT BATCH: 5 192331

202 - (QC14- Inspect Spray Paint) Inspect for foreign object per QSI 024

230 - Assemble as per dwg) 1-Install inserts as per dwg D2750 2-Inspect for Foreign Objects 3-Install blade fitting D3488-4, wearshoes and ground handling hardware as per dwg D2750 SIKA FLEX 241 BATCH: 5174342 EXP DATE: 14-12-8 5-Coat all exposed fasteners with "LPS Procyon" batch: MUB7690

240 - (QC5- Inspect part completeness to step on W/O)

260 - (QC4- 100% Inspect kits for completeness)

270 - (Identify as per dwg & Stock Location:_____) Package as per PPP D350-636-012

275 - record fwd angle: 89.9 Photocopy blue file and type labels per PPP D350-636-012 CHG 008

280 - (QC21- Final Inspection - Work Order Release)

Job BOM

010885

Part / Item	Component Name	Quantity	Operation	Container
D2600-3-BENT-RH	Extrusion Bent RH	1 pcs (1 ea)	90-Skidtubes - 1	S182195
D2744	Cap	1 pcs (1 ea)	110-Skidtubes - 2 - B4B	S192776
D2739	350 I-Beam	1 pcs (1 ea)	160-Skidtubes - 3 - B4B	S183022
D2743	Crossbolt Spacer	8 pcs (8 ea)	160-Skidtubes - 3 - B4B	S182366
AN3C5A	Bolt	34 Ea (34 ea)	230-Handfinish - 4-1-Assembly-B4B	S192144
AN3C6A	Bolt	4 Ea (4 ea)	230-Handfinish - 4-1-Assembly-B4B	S167183
AN6C44A	Bolt	4 Ea (4 ea)	230-Handfinish - 4-1-Assembly-B4B	S184405
AN8C35A	Bolt	1 Ea (1 ea)	230-Handfinish - 4-1-Assembly-B4B	S167090
D2745	Bushing	8 pcs (8 ea)	230-Handfinish - 4-1-Assembly-B4B	S188184
D3488-4	Blade Fitting, RH	1 pcs (1 ea)	230-Handfinish - 4-1-Assembly-B4B	S180162
D3537-1	Wearpad	3 pcs (3 ea)	230-Handfinish - 4-1-Assembly-B4B	S197879
D3631-1	Washer	8 pcs (8 ea)	230-Handfinish - 4-1-Assembly-B4B	S184192
D3791-1	Wearpad	1 pcs (1 ea)	230-Handfinish - 4-1-Assembly-B4B	S189076
D3793-1	Wearplate Fwd	1 pcs (1 ea)	230-Handfinish - 4-1-Assembly-B4B	S187308
D3793-3 X	Wearplate Aft	1 pcs (1 ea)	230-Handfinish - 4-1-Assembly-B4B	X S202005 X
MS21043-6	Nut	4 Ea (4 ea)	230-Handfinish - 4-1-Assembly-B4B	S181771
MS21083C8	Nut	1 Ea (1 ea)	230-Handfinish - 4-1-Assembly-B4B	S167203-1
NAS1149C0332R	Washer	38 Ea (38 ea)	230-Handfinish - 4-1-Assembly-B4B	S158079
NAS1149C0832R	Washer	1 Ea (1 ea)	230-Handfinish - 4-1-Assembly-B4B	S076017 1
NAS1515H3L	Washer	4 Ea (4 ea)	230-Handfinish - 4-1-Assembly-B4B	S083504
ALS4-1032-225	Rivnut	38 Ea (38 ea)	230-Handfinish - 4-1-Assembly-B4B	S174308
AN3C34A	Bolt	1 Ea (1 ea)	230-Handfinish - 4-1-Assembly-B4B	S186091
D3793-5	Wearpad	1 pcs (1 ea)	230-Handfinish - 4-1-Assembly-B4B	S189155
MS21043-3	Nut	1 Ea (1 ea)	230-Handfinish - 4-1-Assembly-B4B	S099564
NAS1149C0363R	Washer	2 Ea (2 ea)	230-Handfinish - 4-1-Assembly-B4B	S130100
AN8C21A	Bolt	2 Ea (2 ea)	250-Packaging 1-1 - Pick Kit - B4B	S160967
D2741	Replacement Blade	1 pcs (1 ea)	250-Packaging 1-1 - Pick Kit - B4B	S197663
MS21083C8	Nut	2 Ea (2 ea)	250-Packaging 1-1 - Pick Kit - B4B	S167203
NAS1149D0863J	Washer	2 Ea (2 ea)	250-Packaging 1-1 - Pick Kit - B4B	S165418

Job Allocations

Operation	Component Part	Required	Inventory	Allocated
90-Skidtubes - 1	D2600-3-BENT-RH	1	5	0
110-Skidtubes - 2 - B4B	D2744	1	0	0
160-Skidtubes - 3 - B4B	D2739	1	17	0
	D2743	8	167	0
230-Handfinish - 4-1-Assembly-B4B	ALS4-1032-225	38	949	0
	AN3C34A	1	43	0
	AN3C5A	34	1,084	0
	AN3C6A	4	205	0
	AN6C44A	4	166	0
	AN8C35A	1	35	0
	D2745	8	168	0
	D3488-4	1	19	0
	D3537-1	3	56	0
	D3631-1	8	492	0
	D3791-1	1	2	0
	D3793-1	1	17	0
	D3793-3	1	13	0
	D3793-5	1	0	0
	MS21043-3	1	1,215	0
	MS21043-6	4	159	0
	MS21083C8	1	110	0
	NAS1149C0332R	38	2,780	0
	NAS1149C0363R	2	765	0
	NAS1149C0832R	1	313	0
	NAS1515H3L	4	234	0
250-Packaging 1-1 - Pick Kit - B4B	AN8C21A	2	157	0
	D2741	1	41	0
	MS21083C8	2	110	0
	NAS1149D0863J	2	407	0

Plex 6/11/19 8:26 AM Dart.lajeunesse.marie

QTY -041	QTY -042	QTY -043	QTY -044	QTY -051	QTY -052	P/N	DESCRIPTION
X						D2750-041	350 SKIDTUBE ASSEMBLY, LH
	X					D2750-042	350 SKIDTUBE ASSEMBLY, RH
		X				D2750-043	350 SKIDTUBE ASSEMBLY, LH
			X			D2750-044	350 SKIDTUBE ASSEMBLY, RH
				X		D2750-051	350 SKIDTUBE ASSEMBLY, LH
					X	D2750-052	350 SKIDTUBE ASSEMBLY, RH
1	1	1	1	1	1	D2739	WEB
8	8	8	8	8	8	D2743	CROSS BOLT SPACER
1	1	1	1	1	1	D2744	CAP
8	8	8	8	8	8	D2745	BUSHING
1						D2750-1	350 SKIDTUBE ASSEMBLY
	1					D2750-2	350 SKIDTUBE ASSEMBLY
		1				D2750-3	350 SKIDTUBE ASSEMBLY
			1			D2750-4	350 SKIDTUBE ASSEMBLY
				1		D2750-5	350 SKIDTUBE ASSEMBLY
					1	D2750-6	350 SKIDTUBE ASSEMBLY
1		1		1		D3488-3	BLADE FITTING, LH
	1		1		1	D3488-4	BLADE FITTING, RH
4	4	4	4			D3490-1	CROSS BOLT SPACER
4	4					D3490-3	CROSS BOLT SPACER
		4	4			D3490-5	CROSS BOLT SPACER
8	8	8	8			D3492-041	PLUG
8	8					D3492-043	PLUG
		8	8			D3492-045	PLUG
3	3	3	3	3	3	D3537-1	WEARPAD
8	8	8	8	8	8	D3631-1	WASHER
1	1	1	1	1	1	D3791-1	WEARPLATE
1	1	1	1	1	1	D3793-1	WEARSHOE
1	1	1	1	1	1	D3793-3	WEARSHOE
1	1	1	1	1	1	D3793-5	WEARSHOE
38	38	38	38	38	38	AL84-1032-225	INSERT
				1	1	AN3C34A	BOLT
34	34	34	34	34	34	AN3C5A	BOLT
4	4	4	4	4	4	AN3C8A	BOLT
4	4	4	4	4	4	AN6C44A	BOLT
1	1	1	1	1	1	AN8C35A	BOLT
				1	1	MS21043-3	NUT
4	4	4	4	4	4	MS21043-6	NUT
1	1	1	1	1	1	MS21083C8	NUT
38	38	38	38	38	38	NAS1149C0332R	WASHER
				2	2	NAS1149C0363R	WASHER
1	1	1	1	1	1	NAS1149C0832R	WASHER
4	4	4	4	4	4	NAS1515H3L	WASHER

NOTES:
1) MATERIAL: MAKE D2750-1/-2/-3/-4/-5/-6 FROM D2600-3 EXTRUSION (INITIAL LENGTH = 120.0).
2) FINISH: ACID ETCH, ALODINE ASSEMBLY PER DART QSI 005 4.1 PRIOR TO INSTALLING D2739 WEB.
STANDARD: PRIME (REF. 4.2.1.3.3) AND PAINT WHITE PER DART QSI 005 4.2
OPTIONAL: POWDER COAT WHITE (REF. 4.3.5.1) PER DART QSI 005 4.3
BLACK ANTI-SKID PAINT AS INDICATED TO 1.0 ABOVE SKIDTUBE CENTER-LINE PER DART 005 4.4 (OPTIONAL).
3) TOLERANCES: PER DART QSI 018 UNLESS OTHERWISE NOTED
4) UNITS: INCHES UNLESS OTHERWISE NOTED
5) BREAK SHARP EDGES: N/A
6) IDENTIFICATION: N/A
7) WEIGHT: D2750-041/-042/-043/-044 = 26.1 lbs
D2750-051/-052 = 25.7 lbs
8) WELD PER DART QSI 004
9) INSTALL AL84-1032-225 INSERTS AFTER FINISH AS INDICATED. DRILL 19/64" SIZE HOLES (Ø0.297) FOR WEARSHOE INSERTS
10) FINAL CONFIGURATION SHOULD HAVE THE FOLLOWING MINIMUM MECHANICAL PROPERTIES:
MINIMUM YIELD TENSILE STRENGTH = 35 KSI
MINIMUM ULTIMATE TENSILE STRENGTH = 38 KSI
11) COAT ALL EXPOSED FASTENERS WITH LPS LABORATORIES "LPS PROCYON" AFTER FINAL ASSEMBLY. CLEAN EXCESS OFF FINISH WITH MEK DEGREASER.
12) SPACER AND PLUG INSTALLED SAME AS SECTION AJ-AJ EXCEPT HORIZONTAL
13) SPACER AND PLUG INSTALLED SAME AS SECTION AP-AP EXCEPT HORIZONTAL

REV.	DESCRIPTION	BY	DATE
H	ADDED -051/-052 (ZN D5-1 SHEETS 4, 15-16); ADDED D2750-5/-6 (ZN C5-1 SHEETS 9, 10); D3488-3/-4 REPLACES D3488-041/-042 (ZN C8-1, D2-11/-12/-13/-14); D3793-5 REPLACES D3533-25 (ZN B8-1, C4-11/-12/-13/-14); NAS1149C0332R REPLACES AN960C10L (ZN A6-1, B1-11/-12/-13/-14, C7-11/-12/-13/-14); NAS1149C0832R REPLACES AN960C816L (ZN A5-1, C1-11/-12/-13/-14); REMOVED D3794-1/-3, AND D3536-25 GASKETS	ZF	18.03.05
G	CORRECTED TOLERANCE ON Ø0.500 THRU HOLE: IS +0.01/-0.000, WAS +0.100/-0.000 (ZN B3-4, B2-5); ADD VIEW TO CONTROL FWD BEND ORIENTATION (ZN D-1-44-46-50); UPDATED FINISH OPTIONS; INSIDE OF TUBE NO LONGER SPRAYED WITH LPS-3. REASON: PAR13-276 AND NCR13-2757	MB	13.07.11
F	INCORPORATE DSI 9413; QTY (8) D3537-1 WAS QTY (6) (ZN C8-1); D3791-1/-3 REPLACES D3635-13/-35 (ZN C8-1); D3794-1/-3 REPLACES D3536-13/-35 (ZN B6-1); ADD D3791-1 (ZN C8-1); WEARSHOE HOLES UNDER FWD/AFT SADDLE REMOVED (8 PL), WEARSHOE HARDWARE QTY UPDATED (ZN B8-1); D3488-041/-042 HARDWARE UPDATED (ZN C1-8, 9, 10, 11); ADD NOTE 12 AND 13 (ZN A6-1); REASON: REF. NCR 08-048	PH	08.07.16
E	CHANGE TO STAINLESS STEEL WEARPLATES; ADD RUBBER GASKETS; CHANGE INSERTS; ADD D3631-1; REMOVE QTY (38) NAS1518H8L; REMOVE QTY (10) NAS1515H8L; REMOVE D2741; QTY (2) AN960C816; REMOVE QTY (6) MS21083C6	CB	07.05.17
D	ADD HOLES AND SPACERS FOR APICAL FLOATS; INCORPORATE DEO 9133/9157	PH	06.01.05
C	ADD D2750-3/D2750-4; INCORPORATE D2738 AND D2740	CP	98.11.18
B	CHANGE: MS24684-9283 TO AN8-16A	CP	98.09.01
A	NEW ISSUE	DS	98.04.16

SHOP COPY
RETURN TO
ENGINEERING
UNCONTROLLED COPY
SUBJECT TO AMENDMENT
WITHOUT NOTICE
WORK ORDER
NO. 196275 MLJ
19-06-11

RELEASED
2018 OCT 19

APPROVED

DESIGN	MM
DRAWN	ZF
CHECKED	MW
MFG. APPR.	DD
APPROVED	NO
DE APPR.	DS
DATE	18.03.05

DART AEROSPACE USA, INC.
EUGENE, OR

DRAWING NO. D2750 — REV. H — SHEET 1 OF 16
TITLE: 350 SKIDTUBE ASSEMBLY — SCALE: NTS

COPYRIGHT © 1998 BY DART AEROSPACE USA, INC.
THIS DRAWING IS PROTECTED AND COPYRIGHTED, AND IS SUPPLIED ON THE EXPRESS CONDITION THAT IT IS NOT TO BE USED FOR ANY PURPOSE OR COPIED OR COMMUNICATED TO ANY OTHER PERSON WITHOUT WRITTEN PERMISSION FROM DART AEROSPACE USA, INC.

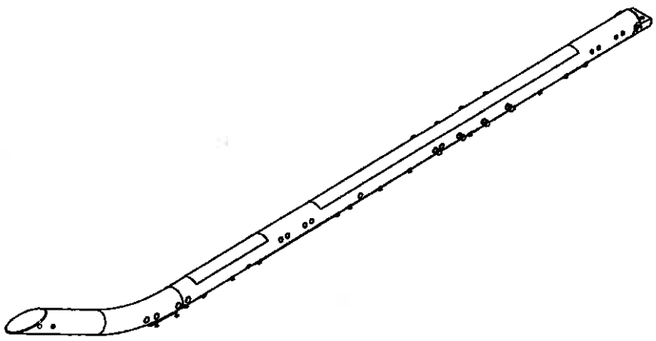

D2750-041 350 SKIDTUBE ASSEMBLY, LH

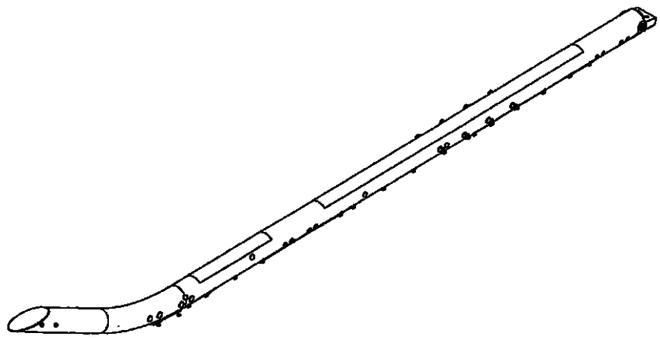

D2750-042 350 SKIDTUBE ASSEMBLY, RH

RELEASED
2019 OCT 19

APPROVED

DESIGN	MM	DART AEROSPACE USA, INC. EUGENE, OR
DRAWN	ZF	
CHECKED	MW	DRAWING NO. D2750 — REV. H — SHEET 2 OF 18
MFG. APPR.	DD	
APPROVED	NO	TITLE 350 SKIDTUBE ASSEMBLY — SCALE NTS
DE APPR.	DS	
DATE	18.03.05	

COPYRIGHT © 1999 BY DART AEROSPACE USA, INC.
THIS DOCUMENT IS PRIVATE AND CONFIDENTIAL AND IS SUPPLIED ON THE EXPRESS CONDITION THAT IT IS NOT TO BE USED FOR ANY PURPOSE OR COPIED OR DISTRIBUTED TO ANY OTHER PERSON WITHOUT WRITTEN PERMISSION FROM DART AEROSPACE USA, INC.

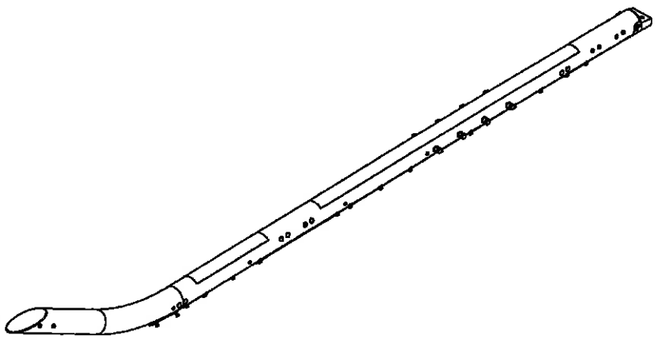

D2750-043 350 SKIDTUBE ASSEMBLY, LH

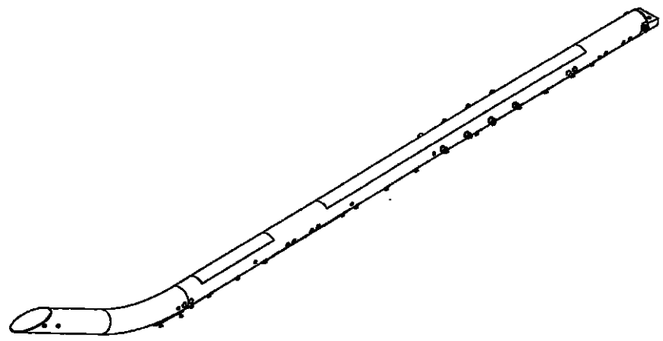

D2750-044 350 SKIDTUBE ASSEMBLY, RH

RELEASED
2018 OCT 19

APPROVED

DESIGN	MM	DART AEROSPACE USA, INC. EUGENE, OR
DRAWN	ZF	
CHECKED	MW	DRAWING NO. D2750 — REV. H — SHEET 3 OF 18
MFG. APPR.	DD	
APPROVED	NO	TITLE: 350 SKIDTUBE ASSEMBLY — SCALE: NTS
DE APPR.	DS	
DATE	18.03.05	

COPYRIGHT © 1999 BY DART AEROSPACE USA, INC.
THIS DOCUMENT IS PRIVATE AND CONFIDENTIAL AND IS SUPPLIED ON THE EXPRESS CONDITION THAT IT IS NOT TO BE USED FOR ANY PURPOSE OR COPIED OR COMMUNICATED TO ANY OTHER PERSON WITHOUT WRITTEN PERMISSION FROM DART AEROSPACE USA, INC.

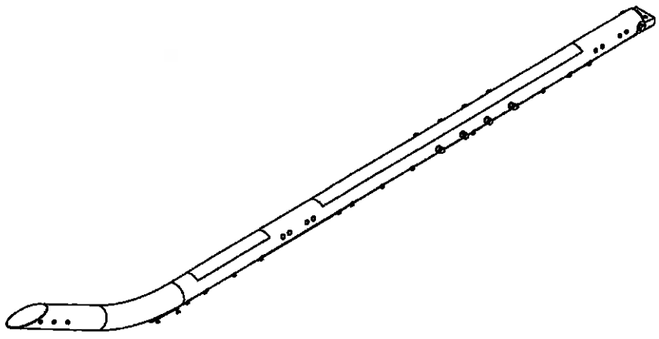

D2750-051 350 SKIDTUBE ASSEMBLY, LH

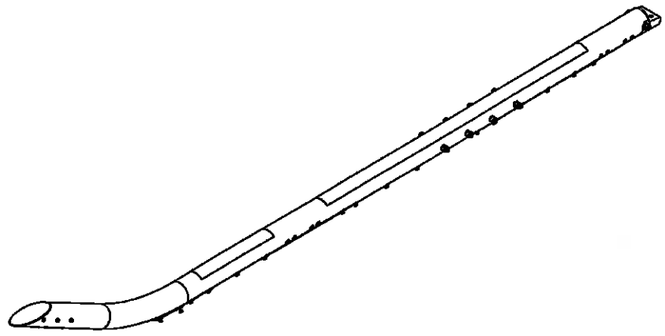

D2750-052 350 SKIDTUBE ASSEMBLY, RH

RELEASED
2018 OCT 19

APPROVED

DESIGN	MM	DART AEROSPACE USA, INC. EUGENE, OR
DRAWN	ZF	
CHECKED	MW	DRAWING NO. D2750 — REV. H — SHEET 4 OF 16
MFG. APPR.	DD	
APPROVED	NO	TITLE 350 SKIDTUBE ASSEMBLY — SCALE NTS
DE APPR.	DS	
DATE	18.03.05	

COPYRIGHT © 1995 BY DART AEROSPACE USA, INC.
THIS DOCUMENT IS PRIVATE AND CONFIDENTIAL AND IS SUPPLIED ON THE EXPRESS CONDITION THAT IT IS NOT TO BE USED FOR ANY PURPOSE OR COPIED OR COMMUNICATED TO ANY OTHER PERSON WITHOUT WRITTEN PERMISSION FROM DART AEROSPACE USA, INC.

D2750-1 LH SKIDTUBE
MAX ALLOWABLE TWIST ON FWD BEND (VIEW LOOKING FWD)
OUTBD
DRILL WEARSHOE HOLES USING DRILL TEMPLATE D16108-1 34 PL
DETAIL A SCALE 2X
DETAIL B SCALE 2X
DETAIL C SCALE 2X
DETAIL D SCALE 2X
SECTION E-E SCALE 4X, 2 PL
SECTION F-F SCALE 4X, 17 PL
SECTION G-G SCALE 4X, 4 PL
SECTION H-H SCALE 4X, 4PL
APPROVED
2018 OCT 19
DART AEROSPACE USA, INC.
EUGENE, OR
DRAWING NO. D2750
REV. H
SHEET 5 OF 16
SCALE NTS
TITLE 350 SKIDTUBE ASSEMBLY
DESIGN MM
DRAWN ZF
CHECKED MW
MFG. APPR. DD
APPROVED NO
DE APPR. DS
DATE 18.03.05

D2750-2 RH SKIDTUBE
MAX ALLOWABLE TWIST ON FWD BEND (VIEW LOOKING FWD)
OUTBD
DRILL WEARSHOE HOLES USING DRILL TEMPLATE DT8109-1 34 PL
DETAIL L SCALE 2X
DETAIL M SCALE 2X
DETAIL K SCALE 2X
DETAIL J SCALE 2X
SECTION R-R SCALE 4X, 4 PL
SECTION Q-Q SCALE 4X, 4PL
SECTION P-P SCALE 4X, 17 PL
SECTION N-N SCALE 4X, 2 PL
APPROVED
2010 OCT 19
DART AEROSPACE USA, INC.
EUGENE, OR
DRAWING NO. D2750
REV. H
SHEET 6 OF 16
TITLE 350 SKIDTUBE ASSEMBLY
SCALE NTS
DESIGN MM
DRAWN ZF
CHECKED MW
MFG. APPR. DD
APPROVED ND
DE APPR. DS
DATE 18.03.05

D2750-3 LH SKIDTUBE
DETAIL S
SCALE 2X
DETAIL T
SCALE 2X
DETAIL U
SCALE 2X
SECTION V-V
SCALE 4X, 17 PL
SECTION W-W
SCALE 4X, 2 PL
SECTION X-X
SCALE 4X, 4 PL
MAX ALLOWABLE TWIST ON FWD BEND (VIEW LOOKING FWD)
OUTBD
DRILL WEARSHOE HOLES USING DRILL TEMPLATE DT8108-1 34 PL
3 EQ. SPACES 4.330 PITCH
RELEASED
2009 OCT 19
APPROVED
DART AEROSPACE USA, INC.
EUGENE, OR
DRAWING NO. D2750
REV. H
SHEET 7 OF 16
TITLE 350 SKIDTUBE ASSEMBLY
SCALE NTS
DATE 18.03.05

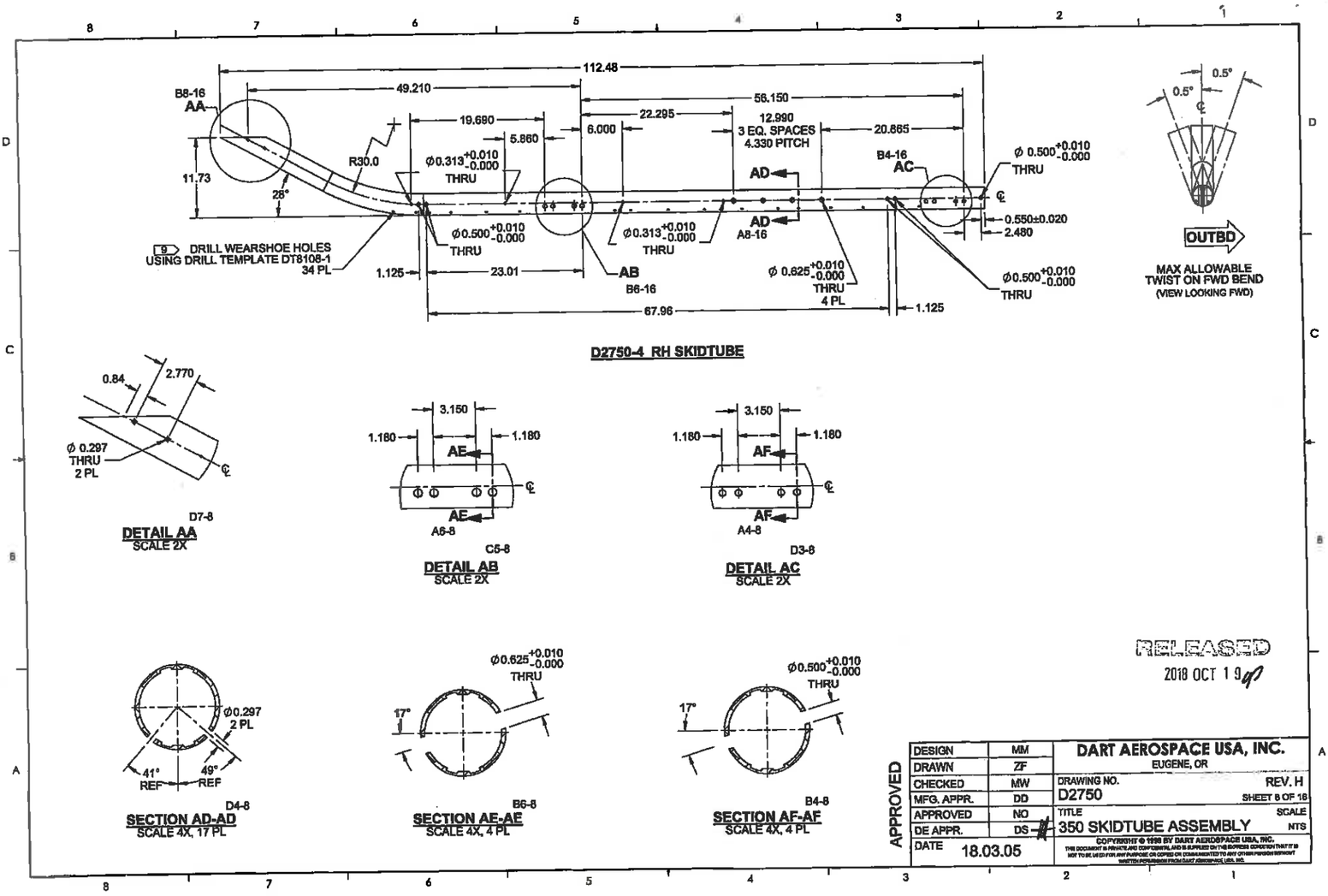
112.48
49.210
56.150
19.680
5.860
22.295
6.000
12.990
3 EQ. SPACES
4.330 PITCH
20.865
B8-16
AA
R30.0
11.73
28°
Ø0.313 +0.010 -0.000
THRU
AD
B4-16
AC
Ø 0.500 +0.010 -0.000
THRU
Ø0.500 +0.010 -0.000
THRU
Ø0.313 +0.010 -0.000
THRU
AD
A8-16
0.550±0.020
2.480
9 DRILL WEARSHOE HOLES
USING DRILL TEMPLATE DT8108-1
34 PL
1.125
23.01
AB
B6-16
Ø 0.625 +0.010 -0.000
THRU
4 PL
67.96
1.125
0.5°
0.5°
OUTBD
MAX ALLOWABLE
TWIST ON FWD BEND
(VIEW LOOKING FWD)
D2750-4 RH SKIDTUBE
0.84
2.770
Ø 0.297
THRU
2 PL
D7-8
DETAIL AA
SCALE 2X
3.150
1.180
1.180
AE
AE
A6-8
C5-8
DETAIL AB
SCALE 2X
3.150
1.180
1.180
AF
AF
A4-8
D3-8
DETAIL AC
SCALE 2X
Ø0.297
2 PL
41°
REF
49°
REF
D4-8
SECTION AD-AD
SCALE 4X, 17 PL
Ø0.625 +0.010 -0.000
THRU
17°
B6-8
SECTION AE-AE
SCALE 4X, 4 PL
Ø0.500 +0.010 -0.000
THRU
17°
B4-8
SECTION AF-AF
SCALE 4X, 4 PL
RELEASED
2018 OCT 19
APPROVED
DESIGN MM
DRAWN ZF
CHECKED MW
MFG. APPR. DD
APPROVED NO
DE APPR. DS
DATE 18.03.05
DART AEROSPACE USA, INC.
EUGENE, OR
DRAWING NO. D2750
REV. H
SHEET 8 OF 18
TITLE 350 SKIDTUBE ASSEMBLY
SCALE NTS
COPYRIGHT © 1998 BY DART AEROSPACE USA, INC.
THIS DOCUMENT IS PRIVATE AND CONFIDENTIAL AND IS SUPPLIED ON THE BORROWER CONDITION THAT IT IS NOT TO BE USED FOR ANY PURPOSE OR COPIED OR COMMUNICATED TO ANY OTHER PERSON WITHOUT WRITTEN PERMISSION FROM DART AEROSPACE USA, INC.

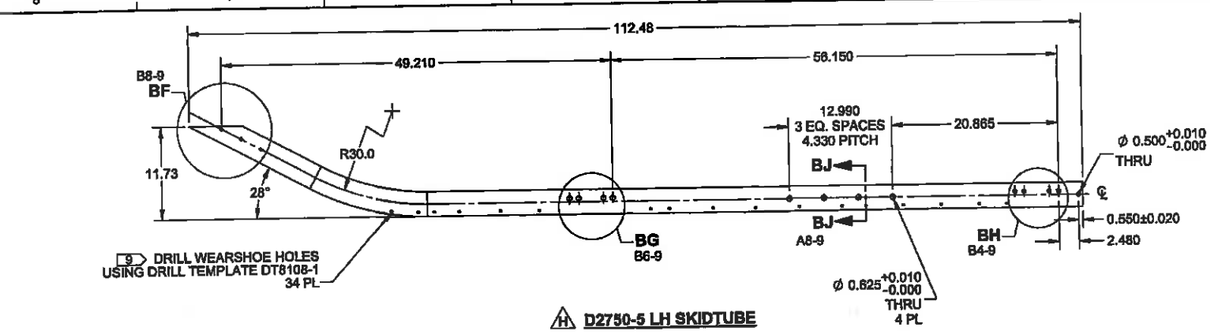

H D2750-5 LH SKIDTUBE

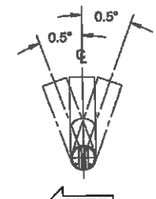

MAX ALLOWABLE
TWIST ON FWD BEND
(VIEW LOOKING FWD)

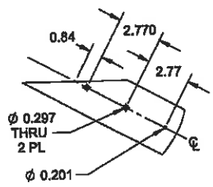

D7-9
DETAIL BF
SCALE 2X

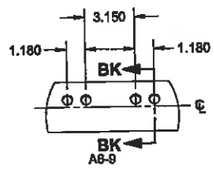

D5-9
DETAIL BG
SCALE 2X

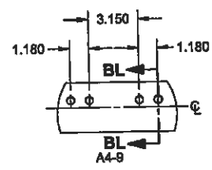

D3-9
DETAIL BH
SCALE 2X

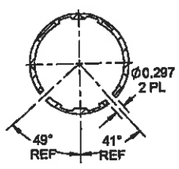

D4-9
SECTION BJ-BJ
SCALE 4X, 17 PL

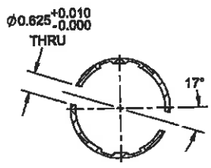

B6-9
SECTION BK-BK
SCALE 4X, 4 PL

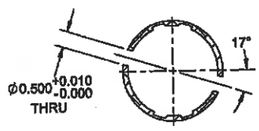

B4-9
SECTION BL-BL
SCALE 4X, 4 PL

RELEASED
2018 OCT 19

APPROVED

DESIGN	MM	DART AEROSPACE USA, INC. EUGENE, OR
DRAWN	ZF	
CHECKED	MW	DRAWING NO. D2750 — REV. H — SHEET 9 OF 18
MFG. APPR.	DD	
APPROVED	NO	TITLE: 350 SKIDTUBE ASSEMBLY — SCALE: NTS
DE APPR.	DS	
DATE	18.03.05	

COPYRIGHT © 1998 BY DART AEROSPACE USA, INC.
THIS DOCUMENT IS PRIVATE AND CONFIDENTIAL AND IS SUPPLIED ON THE EXPRESS CONDITION THAT IT IS NOT TO BE USED FOR ANY PURPOSE OR COPIED OR DISCLOSED TO ANY OTHER PERSON WITHOUT WRITTEN PERMISSION FROM DART AEROSPACE USA, INC.

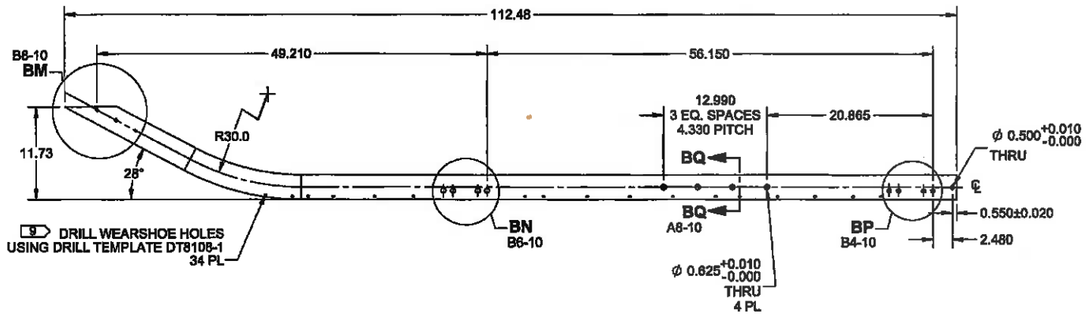

D2750-6 RH SKIDTUBE

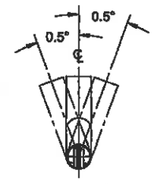

MAX ALLOWABLE
TWIST ON FWD BEND
(VIEW LOOKING FWD)

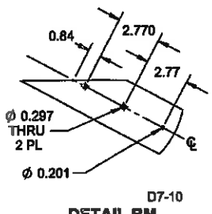

DETAIL BM
SCALE 2X

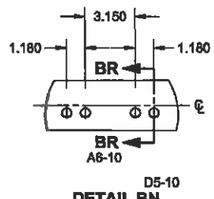

DETAIL BN
SCALE 2X

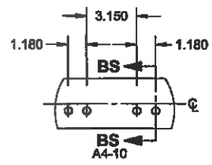

DETAIL BP
SCALE 2X

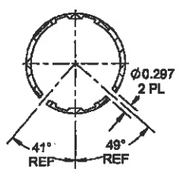

SECTION BQ-BQ
SCALE 4X, 17 PL

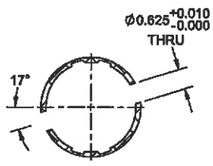

SECTION BR-BR
SCALE 4X, 4 PL

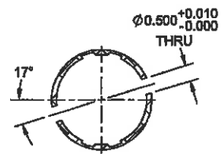

SECTION BS-BS
SCALE 4X, 4 PL

RELEASED
2019 OCT 19

APPROVED

DESIGN	MM	DART AEROSPACE USA, INC. EUGENE, OR
DRAWN	ZF	
CHECKED	MW	DRAWING NO. D2750 — REV. H — SHEET 10 OF 16
MFG. APPR.	DD	
APPROVED	NO	TITLE: 350 SKIDTUBE ASSEMBLY — SCALE: NTS
DE APPR.	DS	
DATE	18.03.05	

COPYRIGHT © 1999 BY DART AEROSPACE USA, INC.
THIS DOCUMENT IS PROVIDED AS CONFIDENTIAL AND IS SUPPLIED ON THE EXPRESS CONDITION THAT IT IS NOT TO BE USED FOR ANY PURPOSE OR COPIED OR DISCLOSED TO ANY OTHER PERSON WITHOUT WRITTEN PERMISSION FROM DART AEROSPACE USA, INC.

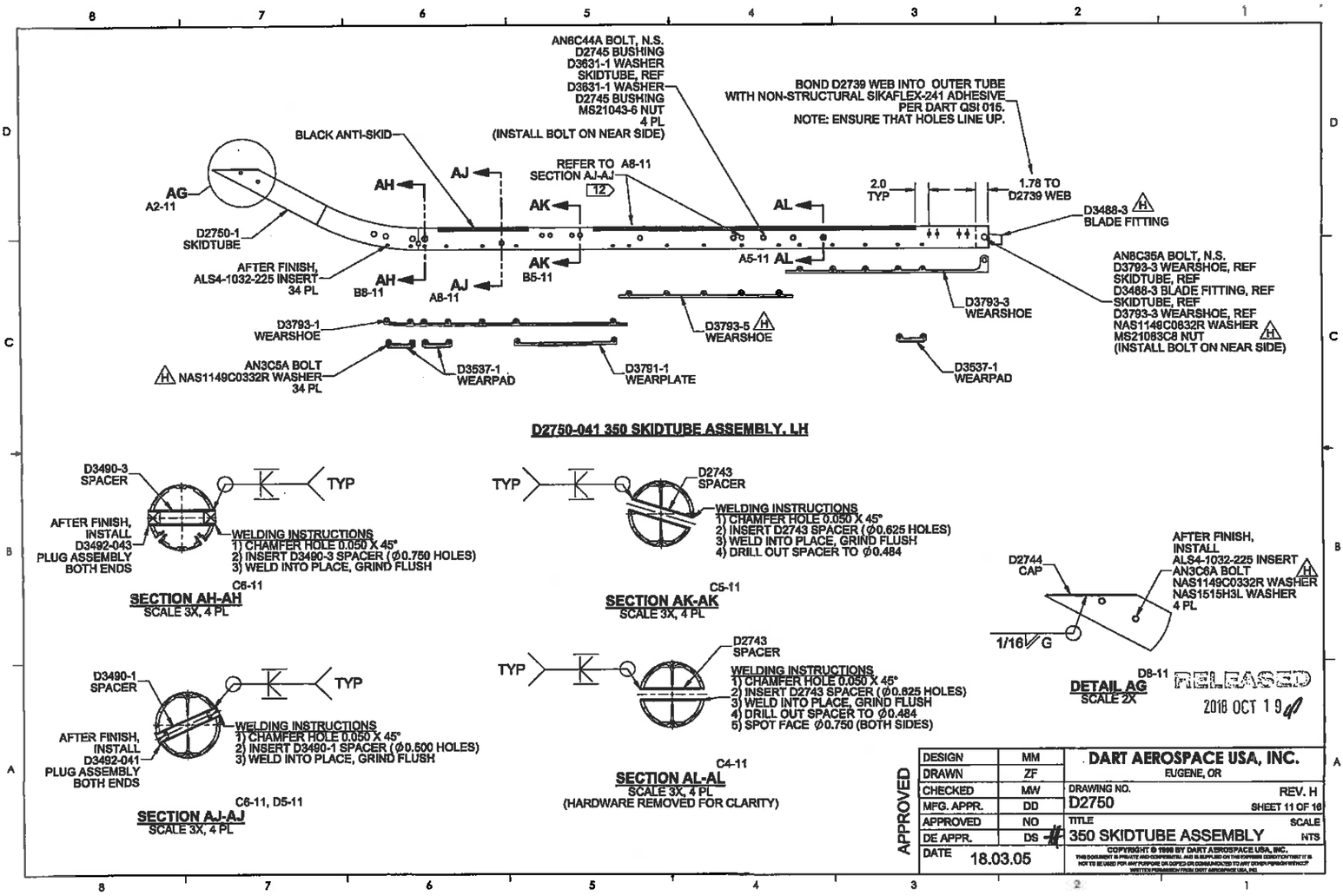

D2750-041 350 SKIDTUBE ASSEMBLY, LH

C6-11

SECTION AH-AH
SCALE 3X, 4 PL

C5-11

SECTION AK-AK
SCALE 3X, 4 PL

D8-11

DETAIL AG
SCALE 2X

C6-11, D5-11

SECTION AJ-AJ
SCALE 3X, 4 PL

C4-11

SECTION AL-AL
SCALE 3X, 4 PL
(HARDWARE REMOVED FOR CLARITY)

RELEASED
2016 OCT 19

DESIGN	MM	DART AEROSPACE USA, INC. EUGENE, OR
DRAWN	ZF	
CHECKED	MW	DRAWING NO. D2750 — REV. H — SHEET 11 OF 16
MFG. APPR.	DD	
APPROVED	NO	TITLE: 350 SKIDTUBE ASSEMBLY — SCALE: NTS
DE APPR.	DS	
DATE	18.03.05	

APPROVED

COPYRIGHT © 1998 BY DART AEROSPACE USA, INC.
THIS DOCUMENT IS PRIVATE AND CONFIDENTIAL, AND IS SUPPLIED ON THE EXPRESS CONDITION THAT IT IS NOT TO BE USED FOR ANY PURPOSE OR DISCLOSED OR DISSEMINATED TO ANY OTHER PERSON WITHOUT WRITTEN PERMISSION FROM DART AEROSPACE USA, INC.

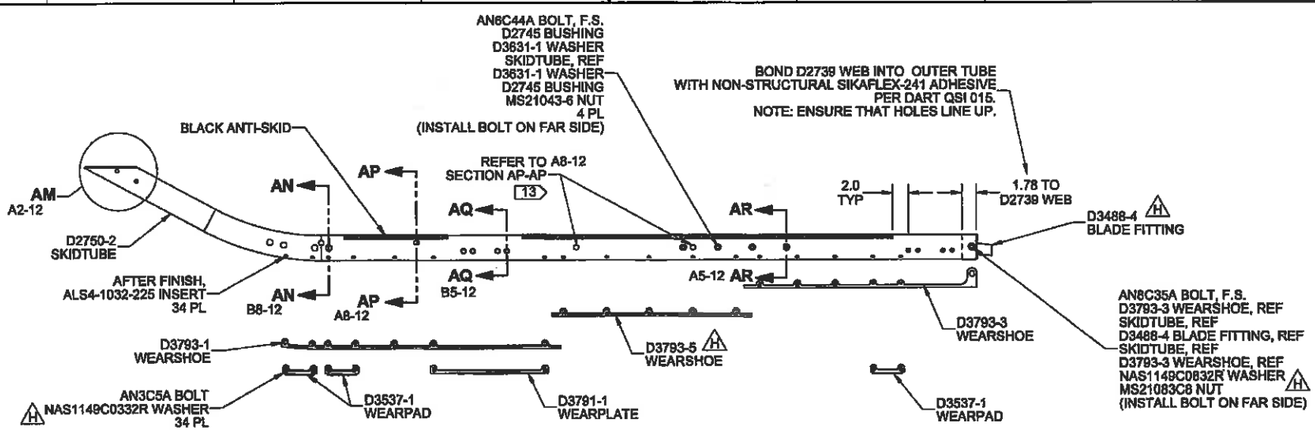

D2750-042 350 SKIDTUBE ASSEMBLY, RH

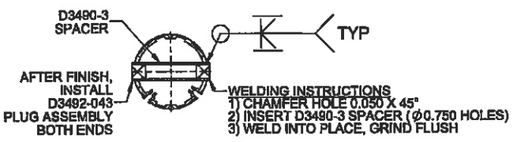

SECTION AN-AN
SCALE 3X, 4 PL

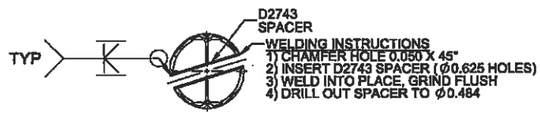

SECTION AQ-AQ
SCALE 3X, 4 PL

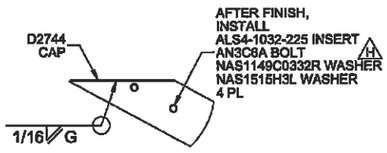

DETAIL AM
SCALE 2X

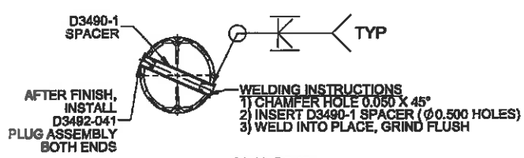

SECTION AP-AP
SCALE 3X, 4 PL

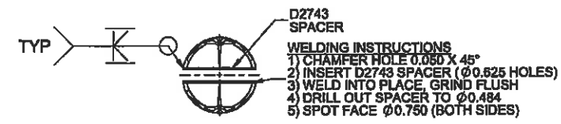

SECTION AR-AR
SCALE 3X, 4 PL
(HARDWARE REMOVED FOR CLARITY)

RELEASED
2018 OCT 19

APPROVED			
DESIGN	MM	DART AEROSPACE USA, INC. EUGENE, OR	
DRAWN	ZF		
CHECKED	MW	DRAWING NO. D2750	REV. H
MFG. APPR.	DD		SHEET 12 OF 18
APPROVED	NO	TITLE 350 SKIDTUBE ASSEMBLY	SCALE NTS
DE APPR.	DS		
DATE 18.03.05			

COPYRIGHT © 1998 BY DART AEROSPACE USA, INC.
THIS DOCUMENT IS PRIVATE AND CONFIDENTIAL AND IS SUPPLIED ON THE EXPRESS CONDITION THAT IT IS NOT TO BE USED FOR ANY PURPOSE OR COPIED OR DISCLOSED TO ANY OTHER PERSON WITHOUT WRITTEN PERMISSION FROM DART AEROSPACE USA, INC.

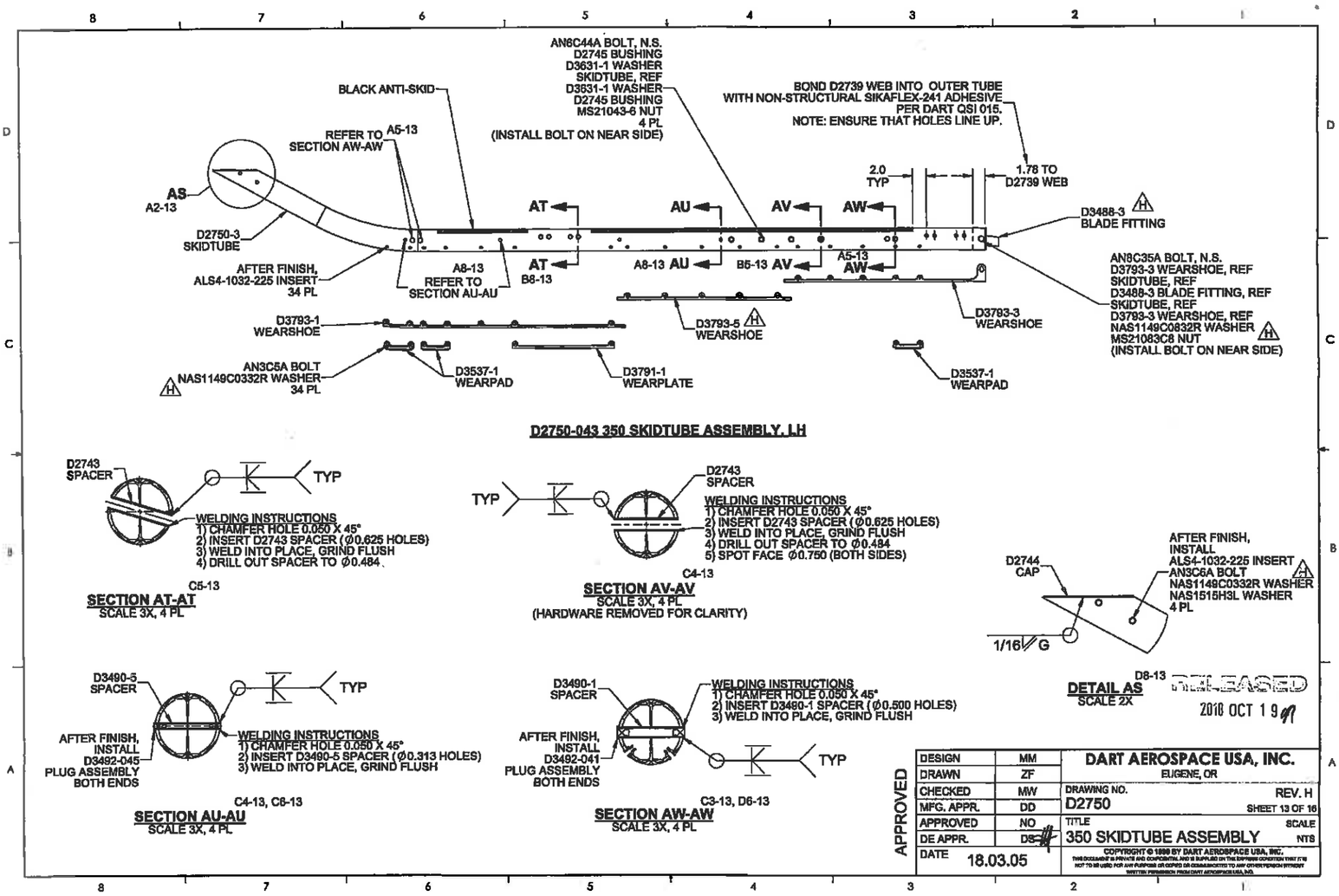
AN6C44A BOLT, N.S.
D2745 BUSHING
D3631-1 WASHER
SKIDTUBE, REF
D3631-1 WASHER
D2745 BUSHING
MS21043-6 NUT
4 PL
(INSTALL BOLT ON NEAR SIDE)
BLACK ANTI-SKID
REFER TO SECTION AW-AW
A5-13
BOND D2739 WEB INTO OUTER TUBE WITH NON-STRUCTURAL SIKAFLEX-241 ADHESIVE PER DART QSI 015.
NOTE: ENSURE THAT HOLES LINE UP.
2.0 TYP
1.78 TO D2739 WEB
AS
A2-13
D2750-3 SKIDTUBE
AT
AU
AV
AW
D3488-3 BLADE FITTING
AFTER FINISH, ALS4-1032-225 INSERT 34 PL
A8-13
REFER TO SECTION AU-AU
B8-13
A8-13
B5-13
A5-13
AN8C35A BOLT, N.S.
D3793-3 WEARSHOE, REF
SKIDTUBE, REF
D3488-3 BLADE FITTING, REF
SKIDTUBE, REF
D3793-3 WEARSHOE, REF
NAS1149C0832R WASHER
MS21083C8 NUT
(INSTALL BOLT ON NEAR SIDE)
D3793-1 WEARSHOE
D3793-5 WEARSHOE
D3793-3 WEARSHOE
AN3C5A BOLT
NAS1149C0332R WASHER
34 PL
D3537-1 WEARPAD
D3791-1 WEARPLATE
D3537-1 WEARPAD
D2750-043 350 SKIDTUBE ASSEMBLY, LH
D2743 SPACER
TYP
WELDING INSTRUCTIONS
1) CHAMFER HOLE 0.050 X 45°
2) INSERT D2743 SPACER (Ø0.625 HOLES)
3) WELD INTO PLACE, GRIND FLUSH
4) DRILL OUT SPACER TO Ø0.484.
C5-13
SECTION AT-AT
SCALE 3X, 4 PL
TYP
D2743 SPACER
WELDING INSTRUCTIONS
1) CHAMFER HOLE 0.050 X 45°
2) INSERT D2743 SPACER (Ø0.625 HOLES)
3) WELD INTO PLACE, GRIND FLUSH
4) DRILL OUT SPACER TO Ø0.484
5) SPOT FACE Ø0.750 (BOTH SIDES)
C4-13
SECTION AV-AV
SCALE 3X, 4 PL
(HARDWARE REMOVED FOR CLARITY)
D2744 CAP
AFTER FINISH, INSTALL
ALS4-1032-225 INSERT
AN3C6A BOLT
NAS1149C0332R WASHER
NAS1515H3L WASHER
4 PL
1/16 G
D8-13
DETAIL AS
SCALE 2X
RELEASED
2018 OCT 19
D3490-5 SPACER
TYP
AFTER FINISH, INSTALL D3492-045 PLUG ASSEMBLY BOTH ENDS
WELDING INSTRUCTIONS
1) CHAMFER HOLE 0.050 X 45°
2) INSERT D3490-5 SPACER (Ø0.313 HOLES)
3) WELD INTO PLACE, GRIND FLUSH
C4-13, C6-13
SECTION AU-AU
SCALE 3X, 4 PL
D3490-1 SPACER
WELDING INSTRUCTIONS
1) CHAMFER HOLE 0.050 X 45°
2) INSERT D3490-1 SPACER (Ø0.500 HOLES)
3) WELD INTO PLACE, GRIND FLUSH
AFTER FINISH, INSTALL D3492-041 PLUG ASSEMBLY BOTH ENDS
TYP
C3-13, D6-13
SECTION AW-AW
SCALE 3X, 4 PL
APPROVED
DESIGN MM
DRAWN ZF
CHECKED MW
MFG. APPR. DD
APPROVED NO
DE APPR. DS
DATE 18.03.05
DART AEROSPACE USA, INC.
EUGENE, OR
DRAWING NO. D2750
REV. H
SHEET 13 OF 16
TITLE 350 SKIDTUBE ASSEMBLY
SCALE NTS
COPYRIGHT © 1999 BY DART AEROSPACE USA, INC.

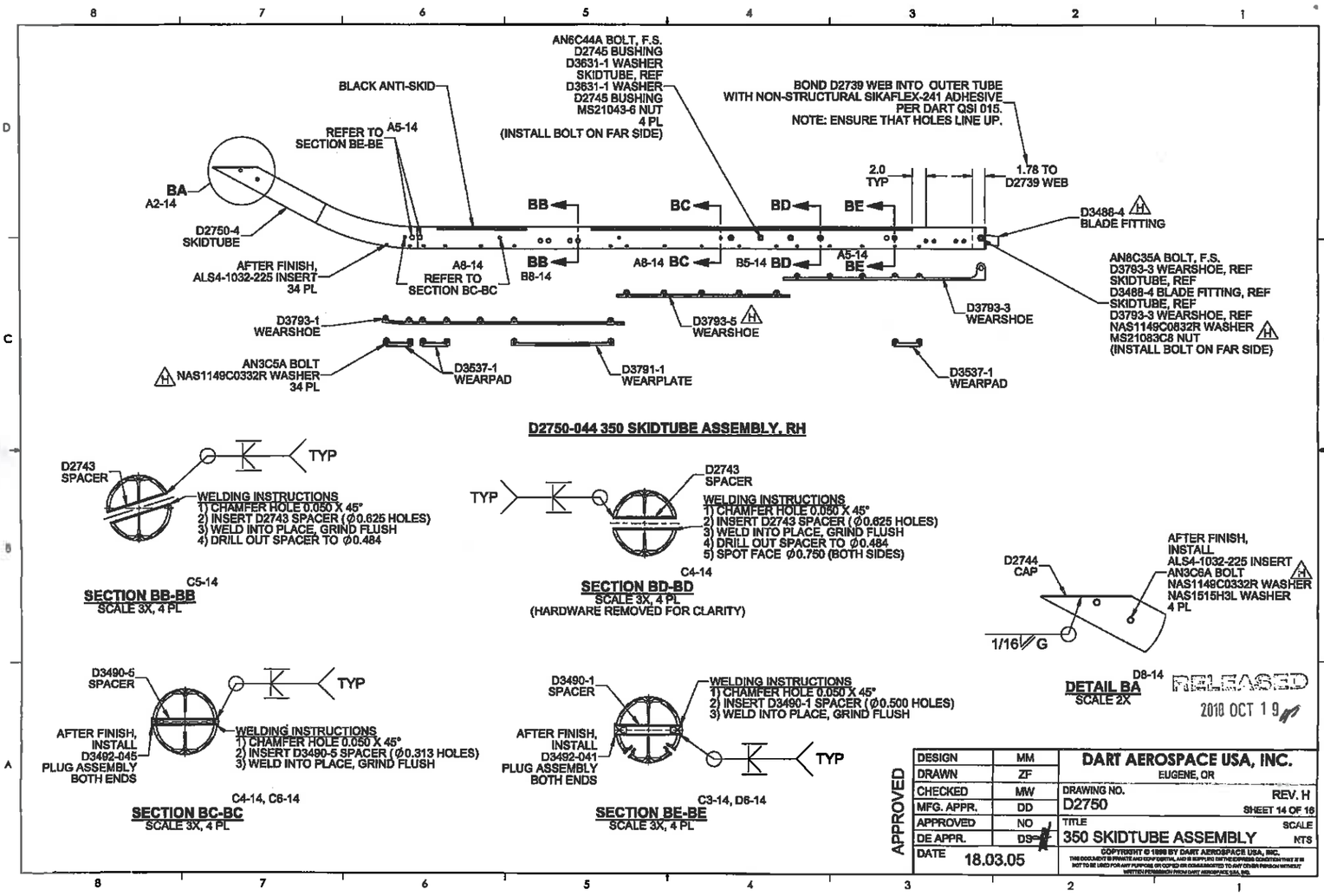

D2750-044 350 SKIDTUBE ASSEMBLY, RH

C5-14

SECTION BB-BB
SCALE 3X, 4 PL

C4-14

SECTION BD-BD
SCALE 3X, 4 PL
(HARDWARE REMOVED FOR CLARITY)

D8-14

DETAIL BA
SCALE 2X

C4-14, C6-14

SECTION BC-BC
SCALE 3X, 4 PL

C3-14, D6-14

SECTION BE-BE
SCALE 3X, 4 PL

RELEASED
2018 OCT 19

APPROVED

DESIGN	MM	DART AEROSPACE USA, INC. EUGENE, OR
DRAWN	ZF	
CHECKED	MW	DRAWING NO. D2750 — REV. H — SHEET 14 OF 16
MFG. APPR.	DD	
APPROVED	NO	TITLE 350 SKIDTUBE ASSEMBLY — SCALE NTS
DE APPR.	DS	
DATE	18.03.05	

COPYRIGHT © 1999 BY DART AEROSPACE USA, INC.
THIS DOCUMENT IS PRIVATE AND CONFIDENTIAL AND IS SUPPLIED ON THE EXPRESS CONDITION THAT IT IS NOT TO BE USED FOR ANY PURPOSE OR COPIED OR COMMUNICATED TO ANY OTHER PERSON WITHOUT WRITTEN PERMISSION FROM DART AEROSPACE USA, INC.

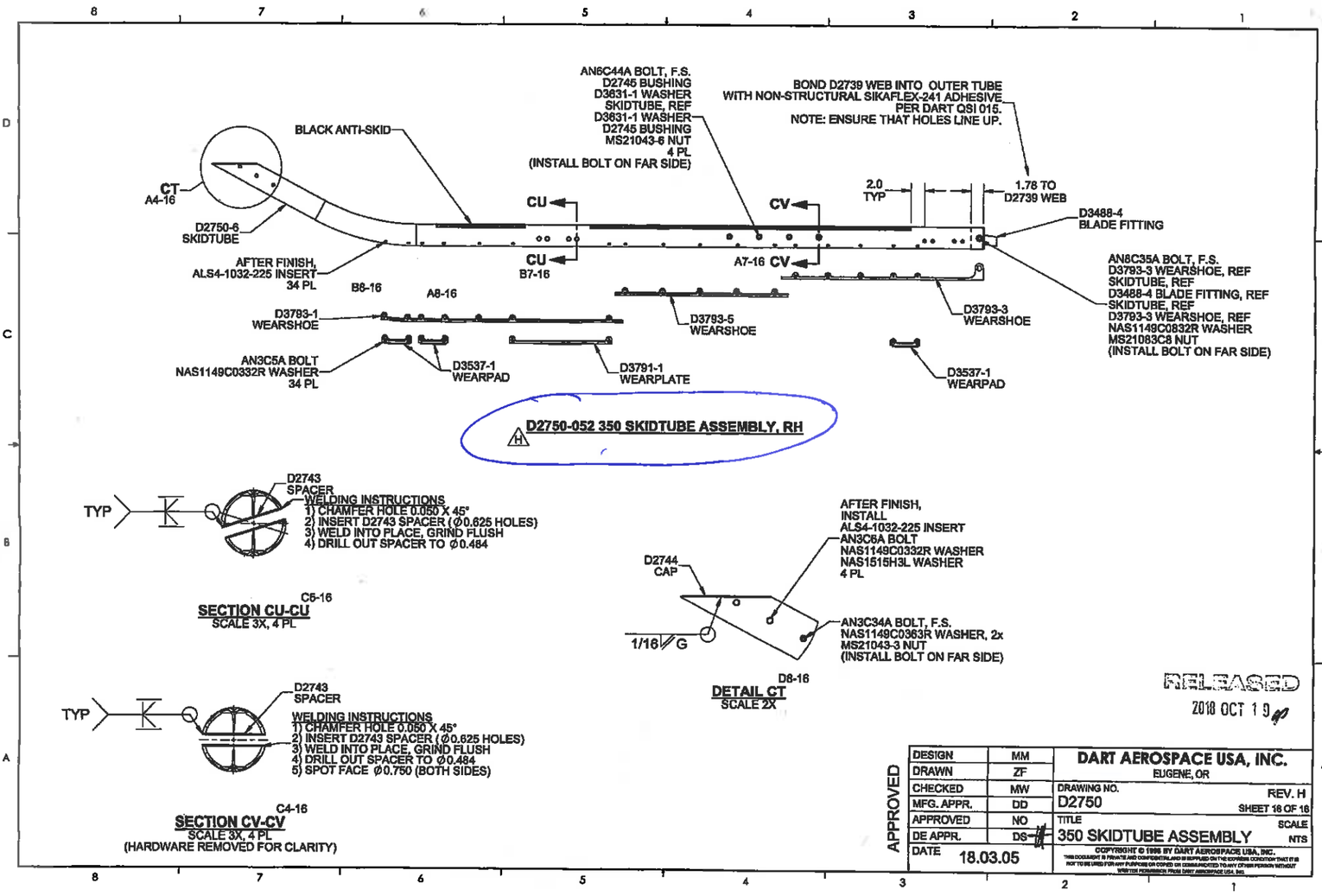
AN6C44A BOLT, F.S.
D2745 BUSHING
D3631-1 WASHER
SKIDTUBE, REF
D3631-1 WASHER
D2745 BUSHING
MS21043-6 NUT
4 PL
(INSTALL BOLT ON FAR SIDE)
BOND D2739 WEB INTO OUTER TUBE
WITH NON-STRUCTURAL SIKAFLEX-241 ADHESIVE
PER DART QSI 015.
NOTE: ENSURE THAT HOLES LINE UP.
BLACK ANTI-SKID
CT
A4-16
D2750-6
SKIDTUBE
CU
CU
B7-16
CV
A7-16 CV
2.0
TYP
1.78 TO
D2739 WEB
D3488-4
BLADE FITTING
AFTER FINISH,
ALS4-1032-225 INSERT
34 PL
B6-16
A8-16
D3793-1
WEARSHOE
D3793-5
WEARSHOE
D3793-3
WEARSHOE
AN6C35A BOLT, F.S.
D3793-3 WEARSHOE, REF
SKIDTUBE, REF
D3488-4 BLADE FITTING, REF
SKIDTUBE, REF
D3793-3 WEARSHOE, REF
NAS1149C0832R WASHER
MS21083C6 NUT
(INSTALL BOLT ON FAR SIDE)
AN3C5A BOLT
NAS1149C0332R WASHER
34 PL
D3537-1
WEARPAD
D3791-1
WEARPLATE
D3537-1
WEARPAD
D2750-052 350 SKIDTUBE ASSEMBLY, RH
H
TYP
D2743
SPACER
WELDING INSTRUCTIONS
1) CHAMFER HOLE 0.050 X 45°
2) INSERT D2743 SPACER (Ø0.625 HOLES)
3) WELD INTO PLACE, GRIND FLUSH
4) DRILL OUT SPACER TO Ø0.484
C6-16
SECTION CU-CU
SCALE 3X, 4 PL
AFTER FINISH,
INSTALL
ALS4-1032-225 INSERT
AN3C6A BOLT
NAS1149C0332R WASHER
NAS1515H3L WASHER
4 PL
D2744
CAP
1/16 G
AN3C34A BOLT, F.S.
NAS1149C0363R WASHER, 2x
MS21043-3 NUT
(INSTALL BOLT ON FAR SIDE)
D6-16
DETAIL CT
SCALE 2X
TYP
D2743
SPACER
WELDING INSTRUCTIONS
1) CHAMFER HOLE 0.050 X 45°
2) INSERT D2743 SPACER (Ø0.625 HOLES)
3) WELD INTO PLACE, GRIND FLUSH
4) DRILL OUT SPACER TO Ø0.484
5) SPOT FACE Ø0.750 (BOTH SIDES)
C4-16
SECTION CV-CV
SCALE 3X, 4 PL
(HARDWARE REMOVED FOR CLARITY)
RELEASED
2018 OCT 19
APPROVED
DESIGN MM
DRAWN ZF
CHECKED MW
MFG. APPR. DD
APPROVED NO
DE APPR. DS
DATE 18.03.05
DART AEROSPACE USA, INC.
EUGENE, OR
DRAWING NO. D2750
REV. H
SHEET 16 OF 16
TITLE 350 SKIDTUBE ASSEMBLY
SCALE NTS
COPYRIGHT © 1996 BY DART AEROSPACE USA, INC.

Entered: _____ Date: _____

WORK ORDER NON-CONFORMANCE / ROUTE UPDATE

NCR No.

Route update only ☐

Job: _____

Part No. _____

DISPOSITION

- Rework ☐
- Scrap ☐
- Use-as-is ☐

DEPARTMENT/PROCESS

Skid-tube ☐	Cross tube ☐	Eng. (Non-AW) ☐	Engineering ☐
Machining ☐	Small Fab ☐	Prod. Eng. Coor. ☐	Water Jet ☐
Large Fab ☐	Finishing ☐	Rec/Store/Packaging ☐	Supplier ☐
			Quality ☐

Date :

Sequence #:

QTY Affected :

MRB (QSI042)

Description Work Order Deviation

Disposition

Completed By

Lead hand / Supervisor

QC / QA Coordinator

Root Cause

- Operator ☐
- Manufacturing Process ☐
- Equip/Tooling ☐
- Handling/Presservation ☐
- Material ☐
- Product Improvement ☐
- Process Improvement ☐
- Human Factors ☐

FAULT CATEGORY

☐ Pressure/Forced	☐ Contamination	☐ Power Loss/Surge	☐ Positioned Wrong
☐ Bending	☐ Misaligned/off center	☐ Folio/Program	☐ Outside Tolerance
☐ Crushing	☐ BOM/Route	☐ Grain Direction	☐ Drawing
☐ Cracks	☐ Broken/Damage/Defect	☐ Weld	☐ Finish
☐ Crimp/Kink/Ripple/Wave/Twist	☐ Incomplete/Unclear Instructions	☐ Wrong Stock Pulled	☐ Part Lost/Missing
☐ Marks/Chatter	☐ Drill Holes	☐ Out of Sequence	☐ Misread
☐ Mislabeled	☐ Fit/Function	☐ Off-set/Set-up	

Other/Details:

Change Record

Part Number: D350-636-021/-022

Description: SKIDTUBE INSTALLATION LH/RH, STD

CHG #	DATE	BY	RELEVANT DOCUMENTS	ECN #
001	18.10.22	MG	MDL-D350-636 REV. V, IIN-D350-636 REV. K, ICA-D350-636 REV. 4,	18-830
			DSI 9662 REV C, DSI 9802 REV A, D2750 REV H, D3535 REV F,	
			D3537 REV F, D3488 REV C, D3791 REV B, D3793 REV B, D4168 REV C	